Deep groove ball bearing 6214 C4 NSK

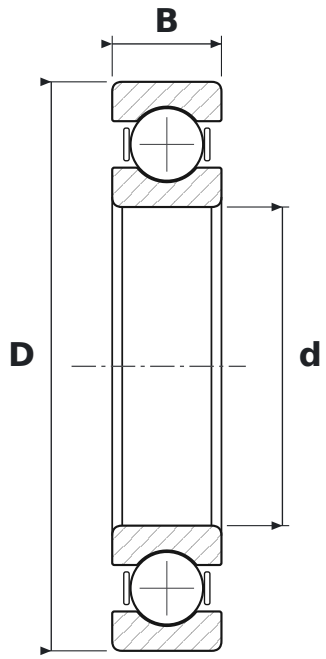

DIMENSIONS

d	bore diameter	**70 mm**
D	outside diameter	**125 mm**
B	width	**24 mm**

WHAT 6214 C4 MEANS

62	łożysko kulkowe zwykłe (6), seria średnic 2 – lekka
C4	large radial clearance

SPECIFICATIONS

Manufacturer	**NSK**
Manufacturer designation	**6214 C4**
Rolling elements	**single-row ball bearing**
Mass	**1.08 kg**