CASTOMER

DATASHEET

Deep groove ball bearing 6214-ZZC3 SKF

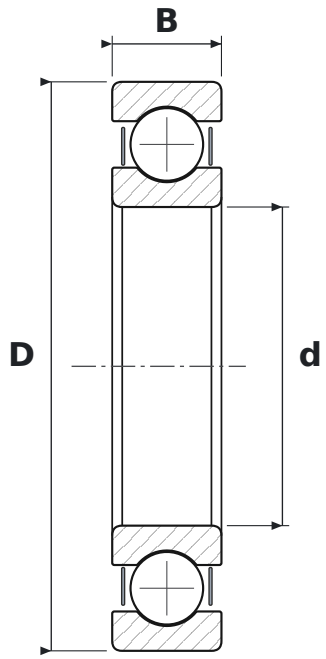

DIMENSIONS

d	bore diameter	**70 mm**
D	outside diameter	**125 mm**
B	width	**24 mm**

WHAT 6214-ZZC3 MEANS

62	łożysko kulkowe zwykłe (6), seria średnic 2 – lekka
ZZ	blaszki ochronne, dwustronne
C3	radial clearance greater than normal

SPECIFICATIONS

Manufacturer	**SKF**
Manufacturer designation	**6214-ZZC3**
Rolling elements	**single-row ball bearing**
Basic dynamic load rating C	**63.7 kN**
Basic static load rating C0	**45 kN**