Deep groove ball bearing 6214 ZZE NACHI

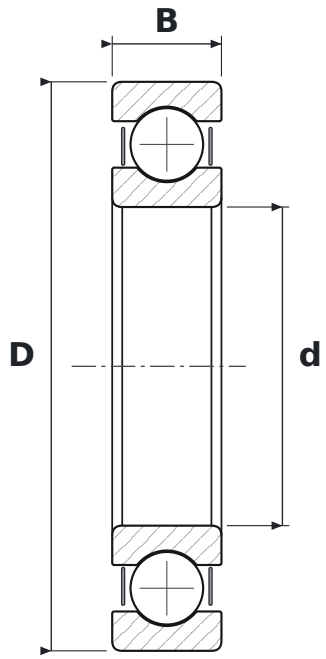

DIMENSIONS

d	bore diameter	**70 mm**
D	outside diameter	**125 mm**
B	width	**24 mm**

WHAT 6214 ZZE MEANS

62	łożysko kulkowe zwykłe (6), seria średnic 2 – lekka
ZZE	blaszki ochronne, dwustronne

SPECIFICATIONS

Manufacturer	**NACHI**
Manufacturer designation	**6214 ZZE**
Rolling elements	**single-row ball bearing**