Deep groove ball bearing 6215-2Z/C3WT SKF

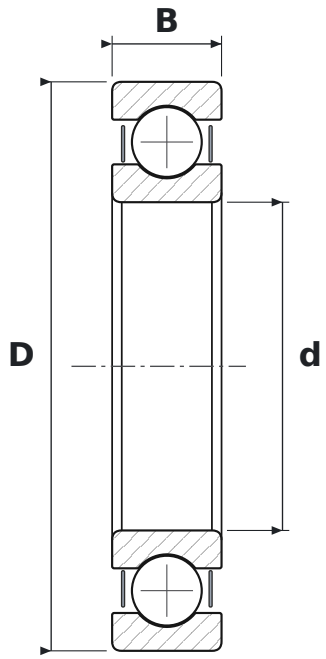

DIMENSIONS

d	bore diameter	**75 mm**
D	outside diameter	**130 mm**
B	width	**25 mm**

WHAT 6215-2Z/C3WT MEANS

62	łożysko kulkowe zwykłe (6), seria średnic 2 – lekka
2Z	steel shields, both sides
C3	radial clearance greater than normal
WT	smar o szerokim zakresie temperatur: zagęszczacz polimocznikowy, olej estrowy, NLGI 2–3

SPECIFICATIONS

Manufacturer	**SKF**
Manufacturer designation	**6215-2Z/C3WT**
Rolling elements	**single-row ball bearing**
Basic dynamic load rating C	**68.9 kN**
Basic static load rating C0	**49 kN**