Deep groove ball bearing 6215-2Z NKE

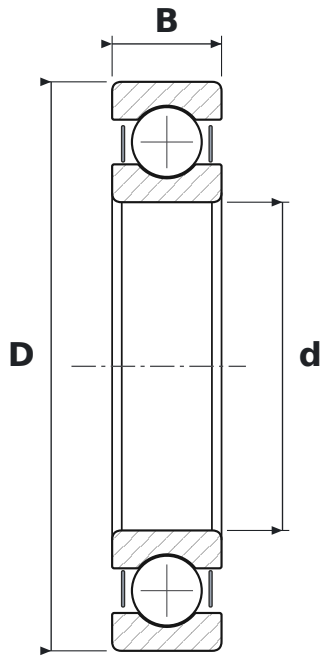

DIMENSIONS

d	bore diameter	**75 mm**
D	outside diameter	**130 mm**
B	width	**25 mm**

WHAT 6215-2Z MEANS

62	łożysko kulkowe zwykłe (6), seria średnic 2 – lekka
2Z	steel shields, both sides

SPECIFICATIONS

Manufacturer	**NKE**
Manufacturer designation	**6215-2Z**
Rolling elements	**single-row ball bearing**
Mass	**1.19 kg**