# Deep groove ball bearing 6215-2Z FAG

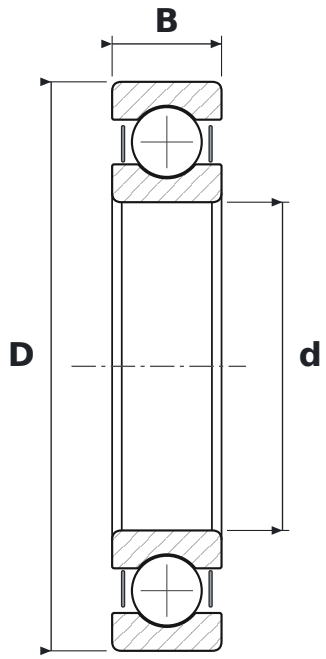


## DIMENSIONS

| | | |
|---|---|---|
| **d** | bore diameter | **75 mm** |
| **D** | outside diameter | **130 mm** |
| **B** | width | **25 mm** |

## WHAT 6215-2Z MEANS

| | |
|---|---|
| **62** | łożysko kulkowe zwykłe (6), seria średnic 2 – lekka |
| **2Z** | steel shields, both sides |

## SPECIFICATIONS

| | |
|---|---|
| Manufacturer | **FAG** |
| Manufacturer designation | **6215-2Z** |
| Rolling elements | **single-row ball bearing** |
| Mass | **1.19 kg** |