Deep groove ball bearing 6215 C3 SKF

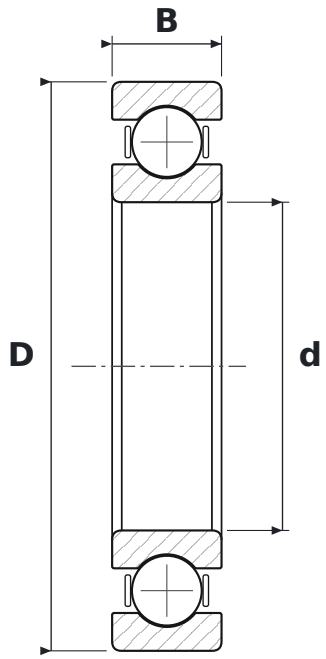

DIMENSIONS

d	bore diameter	**75 mm**
D	outside diameter	**130 mm**
B	width	**25 mm**

WHAT 6215 C3 MEANS

62	łożysko kulkowe zwykłe (6), seria średnic 2 – lekka
C3	radial clearance greater than normal

SPECIFICATIONS

Manufacturer	**SKF**
Manufacturer designation	**6215 C3**
Rolling elements	**single-row ball bearing**
Basic dynamic load rating C	**68.9 kN**
Basic static load rating C0	**49 kN**
Mass	**1.157 kg**