Deep groove ball bearing 6215-P6 FAG

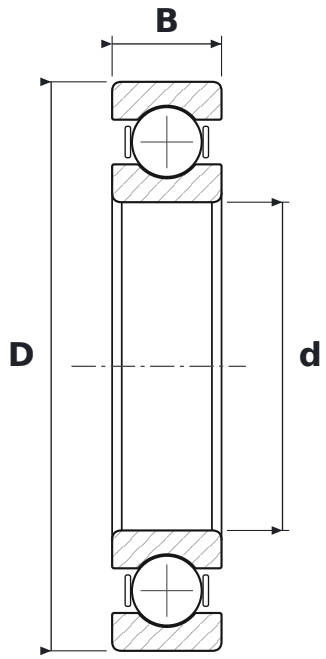

DIMENSIONS

d	bore diameter	**75 mm**
D	outside diameter	**130 mm**
B	width	**25 mm**

WHAT 6215-P6 MEANS

62	łożysko kulkowe zwykłe (6), seria średnic 2 – lekka
P6	tolerance class P6

SPECIFICATIONS

Manufacturer	**FAG**
Manufacturer designation	**6215-P6**
Rolling elements	**single-row ball bearing**