Deep groove ball bearing 6215 ZENR NACHI

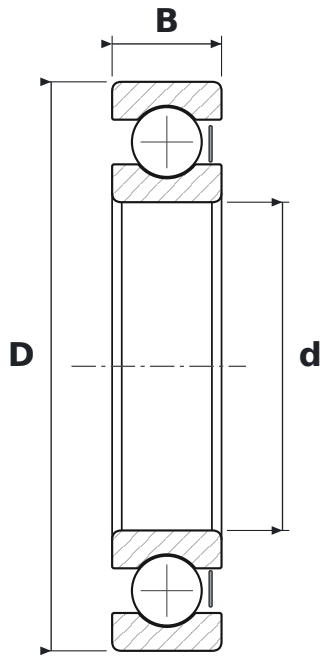

DIMENSIONS

d	bore diameter	**75 mm**
D	outside diameter	**130 mm**
B	width	**25 mm**

WHAT 6215 ZENR MEANS

62	łożysko kulkowe zwykłe (6), seria średnic 2 – lekka
ZE	blaszka ochronna, jednostronna
NR	snap ring groove with snap ring

SPECIFICATIONS

Manufacturer	**NACHI**
Manufacturer designation	**6215 ZENR**
Rolling elements	**single-row ball bearing**