Deep groove ball bearing 6215-ZNR NTN

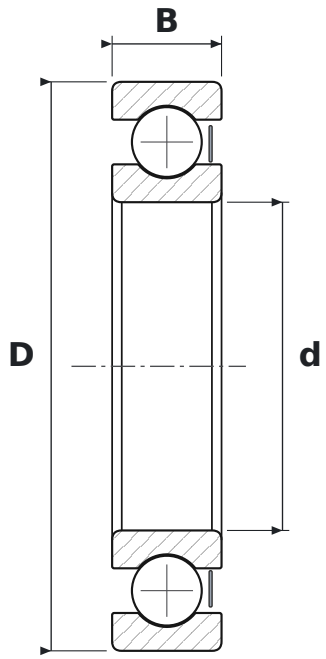

DIMENSIONS

d	bore diameter	**75 mm**
D	outside diameter	**130 mm**
B	width	**25 mm**

WHAT 6215-ZNR MEANS

62	łożysko kulkowe zwykłe (6), seria średnic 2 – lekka
Z	steel shield, one side
NR	snap ring groove with snap ring

SPECIFICATIONS

Manufacturer	**NTN**
Manufacturer designation	**6215-ZNR**
Rolling elements	**single-row ball bearing**
Mass	**1.225 kg**