Deep groove ball bearing 6216-2RS1C3 SKF

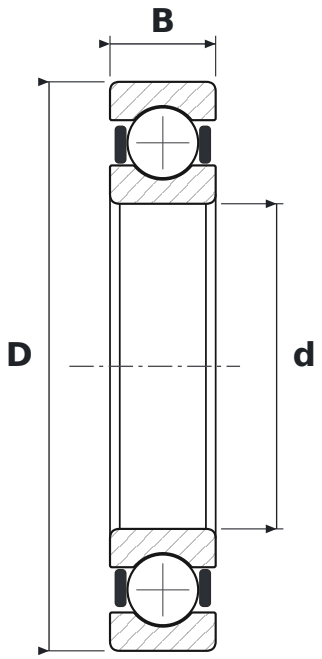

DIMENSIONS

d	bore diameter	**80 mm**
D	outside diameter	**140 mm**
B	width	**26 mm**

WHAT 6216-2RS1C3 MEANS

62	łożysko kulkowe zwykłe (6), seria średnic 2 – lekka
2RS1	uszczelnienia stykowe z kauczuku NBR wzmocnione blachą stalową, dwustronne
C3	radial clearance greater than normal

SPECIFICATIONS

Manufacturer	**SKF**
Manufacturer designation	**6216-2RS1C3**
Rolling elements	**single-row ball bearing**
Basic dynamic load rating C	**72.8 kN**
Basic static load rating C0	**53 kN**