Deep groove ball bearing 6216 NSK

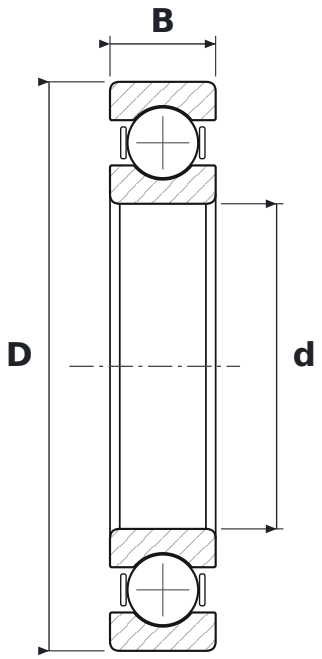

DIMENSIONS

d	bore diameter	**80 mm**
D	outside diameter	**140 mm**
B	width	**26 mm**

SPECIFICATIONS

Manufacturer	**NSK**
Manufacturer designation	**6216**
Rolling elements	**single-row ball bearing**
Seal	**open – no seals**
Radial internal clearance	**CN – normal**