Deep groove ball bearing 6217 C4 KOYO

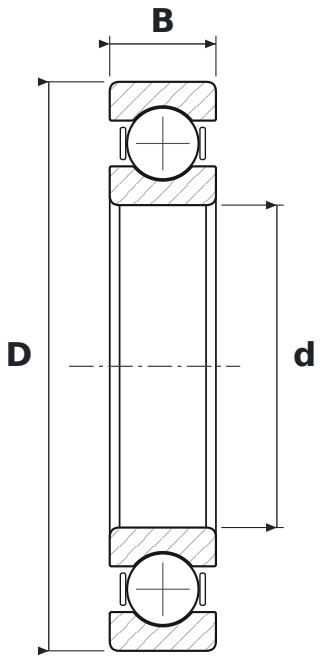

DIMENSIONS

d	bore diameter	**85 mm**
D	outside diameter	**150 mm**
B	width	**28 mm**

WHAT 6217 C4 MEANS

62	łożysko kulkowe zwykłe (6), seria średnic 2 – lekka
C4	large radial clearance

SPECIFICATIONS

Manufacturer	**KOYO**
Manufacturer designation	**6217 C4**
Rolling elements	**single-row ball bearing**