Deep groove ball bearing 6217 CM NTN

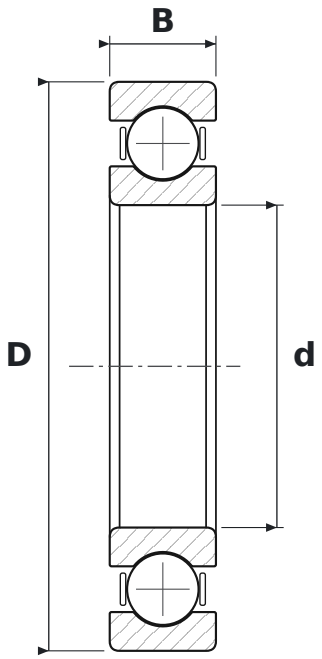

DIMENSIONS

d	bore diameter	**85 mm**
D	outside diameter	**150 mm**
B	width	**28 mm**

WHAT 6217 CM MEANS

62	łożysko kulkowe zwykłe (6), seria średnic 2 – lekka
CM	clearance for electric motors (quiet running)

SPECIFICATIONS

Manufacturer	**NTN**
Manufacturer designation	**6217 CM**
Rolling elements	**single-row ball bearing**