CASTOMER

DATASHEET

Deep groove ball bearing 6217-2Z/C3 SKF

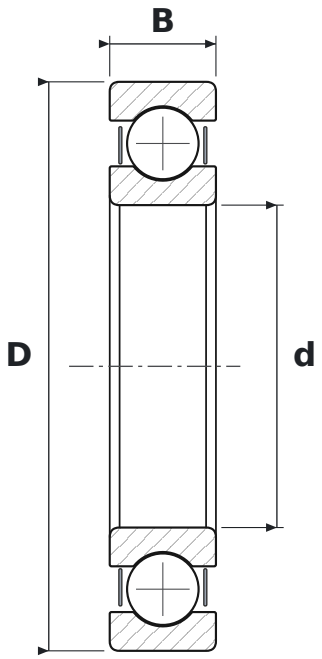

DIMENSIONS

d	bore diameter	**85 mm**
D	outside diameter	**150 mm**
B	width	**28 mm**

WHAT 6217-2Z/C3 MEANS

62	łożysko kulkowe zwykłe (6), seria średnic 2 – lekka
2Z	steel shields, both sides
C3	radial clearance greater than normal

SPECIFICATIONS

Manufacturer	**SKF**
Manufacturer designation	**6217-2Z/C3**
Rolling elements	**single-row ball bearing**
Basic dynamic load rating C	**87.1 kN**
Basic static load rating C0	**64 kN**
Mass	**1.779 kg**