CASTOMER

DATASHEET

Deep groove ball bearing 6218-2Z-C3 FAG

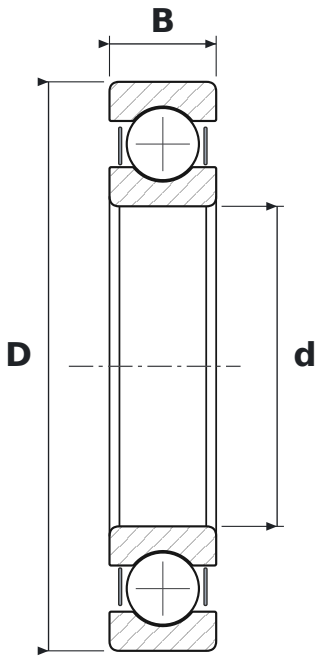

DIMENSIONS

d	bore diameter	**90 mm**
D	outside diameter	**160 mm**
B	width	**30 mm**

WHAT 6218-2Z-C3 MEANS

62	łożysko kulkowe zwykłe (6), seria średnic 2 – lekka
2Z	steel shields, both sides
C3	radial clearance greater than normal

SPECIFICATIONS

Manufacturer	**FAG**
Manufacturer designation	**6218-2Z-C3**
Rolling elements	**single-row ball bearing**
Mass	**2.29 kg**