Deep groove ball bearing 6218-M-C3 NKE

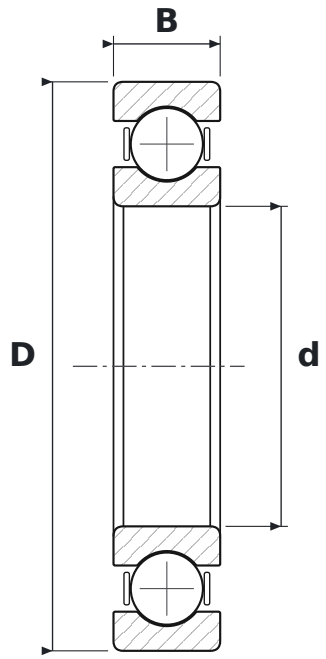

DIMENSIONS

d	bore diameter	**90 mm**
D	outside diameter	**160 mm**
B	width	**30 mm**

WHAT 6218-M-C3 MEANS

62	łożysko kulkowe zwykłe (6), seria średnic 2 – lekka
M	machined brass cage
C3	radial clearance greater than normal

SPECIFICATIONS

Manufacturer	**NKE**
Manufacturer designation	**6218-M-C3**
Rolling elements	**single-row ball bearing**