CASTOMER

DATASHEET

Deep groove ball bearing 6219-2Z NKE

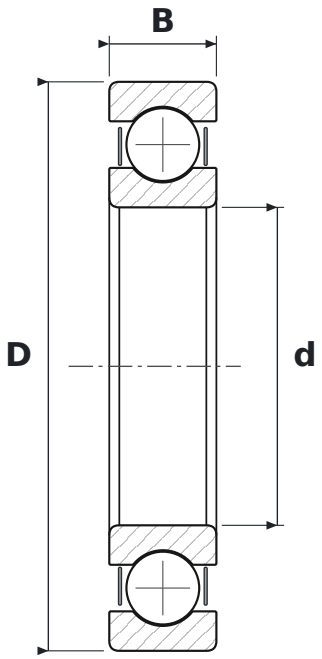

DIMENSIONS

d	bore diameter	**95 mm**
D	outside diameter	**170 mm**
B	width	**32 mm**

WHAT 6219-2Z MEANS

62	łożysko kulkowe zwykłe (6), seria średnic 2 – lekka
2Z	steel shields, both sides

SPECIFICATIONS

Manufacturer	**NKE**
Manufacturer designation	**6219-2Z**
Rolling elements	**single-row ball bearing**