Deep groove ball bearing 6219 C3 SNR

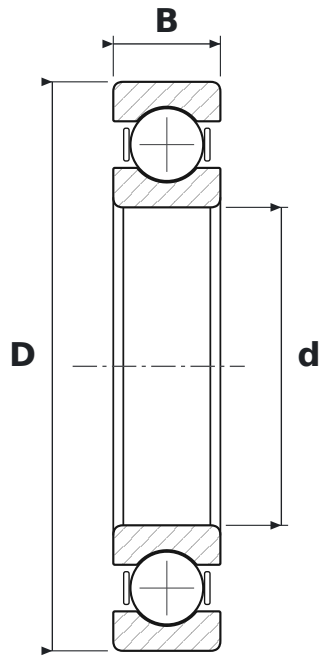

DIMENSIONS

d	bore diameter	**95 mm**
D	outside diameter	**170 mm**
B	width	**32 mm**

WHAT 6219 C3 MEANS

62	łożysko kulkowe zwykłe (6), seria średnic 2 – lekka
C3	radial clearance greater than normal

SPECIFICATIONS

Manufacturer	**SNR**
Manufacturer designation	**6219 C3**
Rolling elements	**single-row ball bearing**