# Deep groove ball bearing 6219 EE SNR

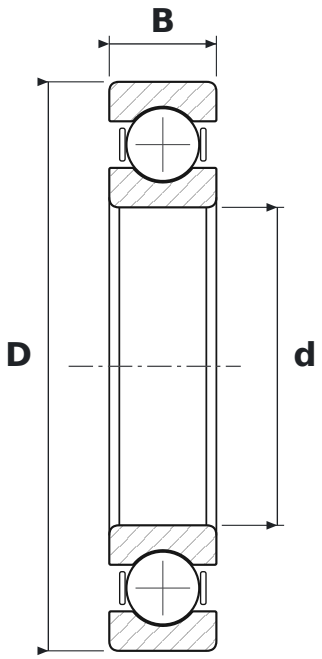


## DIMENSIONS

| | | |
|---|---|---|
| **d** | bore diameter | **95 mm** |
| **D** | outside diameter | **170 mm** |
| **B** | width | **32 mm** |

## WHAT 6219 EE MEANS

| | |
|---|---|
| **62** | łożysko kulkowe zwykłe (6), seria średnic 2 – lekka |
| **EE** | uszczelnienia stykowe, dwustronne |

## SPECIFICATIONS

| | |
|---|---|
| Manufacturer | **SNR** |
| Manufacturer designation | **6219 EE** |
| Rolling elements | **single-row ball bearing** |