Deep groove ball bearing 6220 C3 KOYO

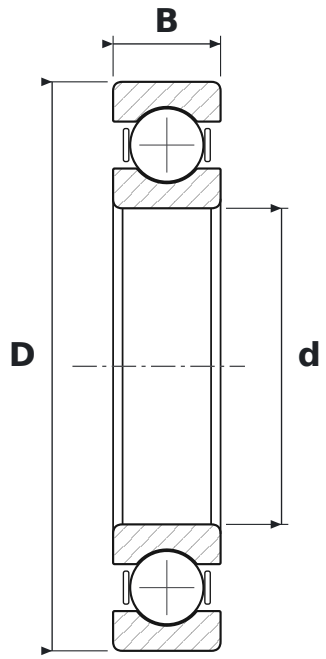

DIMENSIONS

d	bore diameter	**100 mm**
D	outside diameter	**180 mm**
B	width	**34 mm**

WHAT 6220 C3 MEANS

62	łożysko kulkowe zwykłe (6), seria średnic 2 – lekka
C3	radial clearance greater than normal

SPECIFICATIONS

Manufacturer	**KOYO**
Manufacturer designation	**6220 C3**
Rolling elements	**single-row ball bearing**