Deep groove ball bearing 6220 CM NTN

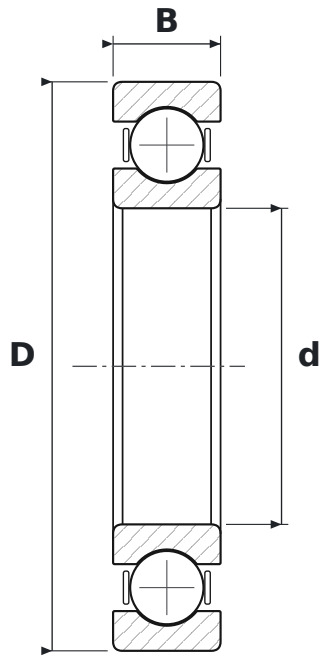

DIMENSIONS

d	bore diameter	**100 mm**
D	outside diameter	**180 mm**
B	width	**34 mm**

WHAT 6220 CM MEANS

62	łożysko kulkowe zwykłe (6), seria średnic 2 – lekka
CM	clearance for electric motors (quiet running)

SPECIFICATIONS

Manufacturer	**NTN**
Manufacturer designation	**6220 CM**
Rolling elements	**single-row ball bearing**