Deep groove ball bearing 62200-2RSR-C3 FAG

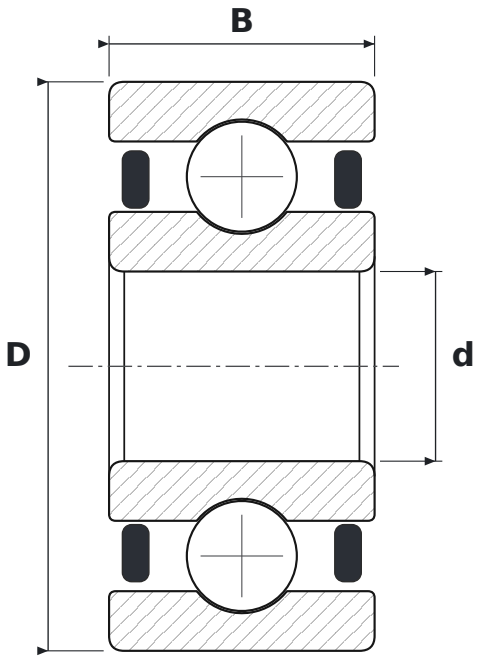

DIMENSIONS

d	bore diameter	**10 mm**
D	outside diameter	**30 mm**
B	width	**14 mm**

WHAT 62200-2RSR-C3 MEANS

2RSR	uszczelnienia wargowe stykowe (NBR), dwustronne – warga przylega promieniowo
C3	radial clearance greater than normal

SPECIFICATIONS

Manufacturer	**FAG**
Manufacturer designation	**62200-2RSR-C3**
Rolling elements	**single-row ball bearing**
Mass	**0.05 kg**