Deep groove ball bearing 62202-2RS1C3 SKF

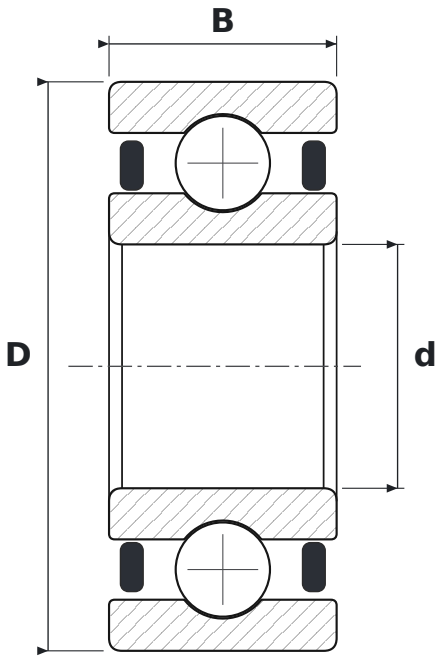

DIMENSIONS

d	bore diameter	**15 mm**
D	outside diameter	**35 mm**
B	width	**14 mm**

WHAT 62202-2RS1C3 MEANS

2RS1	uszczelnienia stykowe z kauczuku NBR wzmocnione blachą stalową, dwustronne
C3	radial clearance greater than normal

SPECIFICATIONS

Manufacturer	**SKF**
Manufacturer designation	**62202-2RS1C3**
Rolling elements	**single-row ball bearing**
Mass	**0.057 kg**