# Deep groove ball bearing 62202-2RSR-C3 FAG

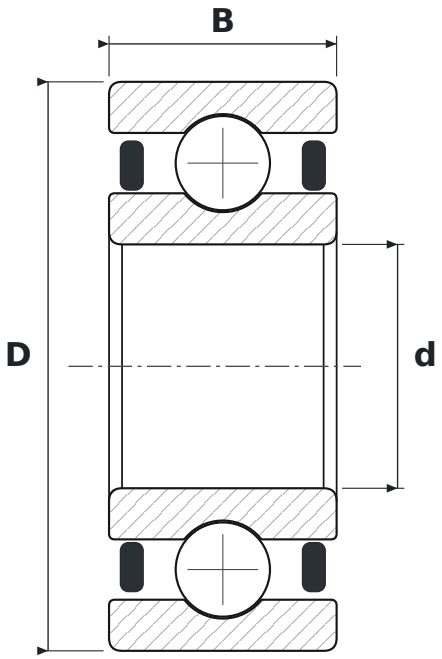


## DIMENSIONS

| | | |
|---|---|---|
| **d** | bore diameter | **15 mm** |
| **D** | outside diameter | **35 mm** |
| **B** | width | **14 mm** |

## WHAT 62202-2RSR-C3 MEANS

| | |
|---|---|
| **2RSR** | uszczelnienia wargowe stykowe (NBR), dwustronne – warga przylega promieniowo |
| **C3** | radial clearance greater than normal |

## SPECIFICATIONS

| | |
|---|---|
| Manufacturer | **FAG** |
| Manufacturer designation | **62202-2RSR-C3** |
| Rolling elements | **single-row ball bearing** |
| Mass | **0.055 kg** |