Deep groove ball bearing 62209-2RS TIMKEN

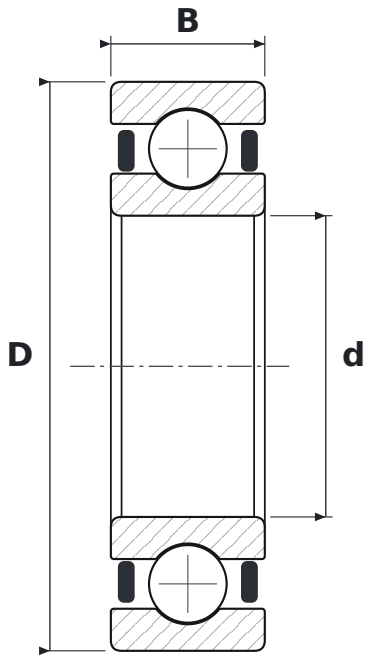

DIMENSIONS

d	bore diameter	**45 mm**
D	outside diameter	**85 mm**
B	width	**23 mm**

SPECIFICATIONS

Manufacturer	**TIMKEN**
Manufacturer designation	**62209-2RS**
Rolling elements	**single-row ball bearing**
2RS	**contact rubber seals, both sides**
Radial internal clearance	**CN – normal**