Deep groove ball bearing 6221 ZZ NACHI

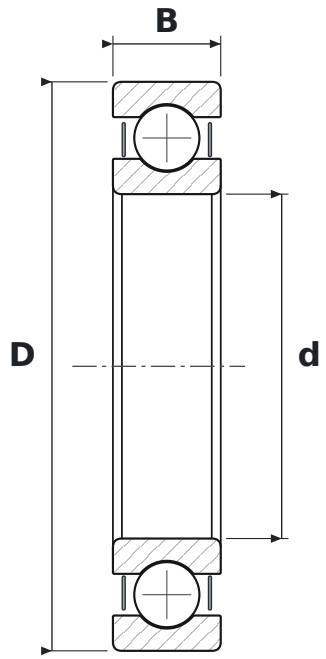

DIMENSIONS

d	bore diameter	**115 mm**
D	outside diameter	**190 mm**
B	width	**36 mm**

SPECIFICATIONS

Manufacturer	**NACHI**
Manufacturer designation	**6221 ZZ**
Rolling elements	**single-row ball bearing**
2Z	**steel shields, both sides**
Radial internal clearance	**CN – normal**