# Deep groove ball bearing 6221-ZZC3 NSK

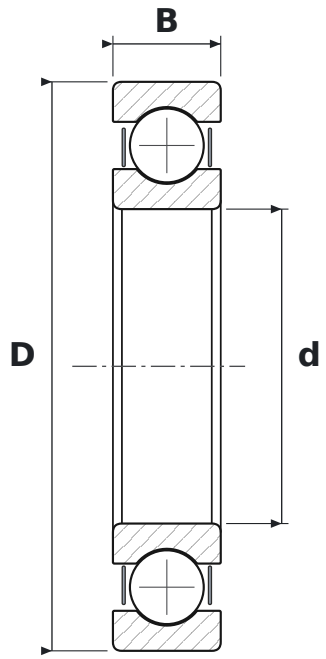


## DIMENSIONS

| | | |
|---|---|---|
| **d** | bore diameter | **105 mm** |
| **D** | outside diameter | **190 mm** |
| **B** | width | **36 mm** |

## WHAT 6221-ZZC3 MEANS

| | |
|---|---|
| **62** | łożysko kulkowe zwykłe (6), seria średnic 2 – lekka |
| **ZZ** | blaszki ochronne, dwustronne |
| **C3** | radial clearance greater than normal |

## SPECIFICATIONS

| | |
|---|---|
| Manufacturer | **NSK** |
| Manufacturer designation | **6221-ZZC3** |
| Rolling elements | **single-row ball bearing** |