Deep groove ball bearing 62213 ZEN

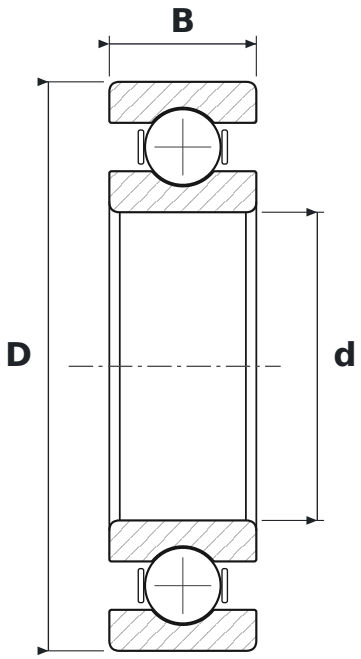

DIMENSIONS

d	bore diameter	**65 mm**
D	outside diameter	**120 mm**
B	width	**31 mm**

SPECIFICATIONS

Manufacturer	**ZEN**
Manufacturer designation	**62213**
Rolling elements	**single-row ball bearing**
Seal	**open – no seals**
Radial internal clearance	**CN – normal**
Mass	**1.297 kg**