Deep groove ball bearing 6222-2NS NACHI

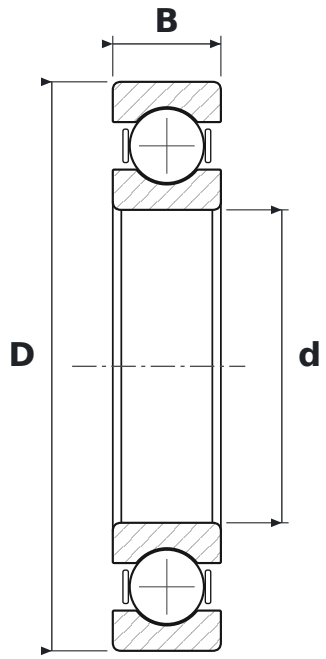

DIMENSIONS

d	bore diameter	**110 mm**
D	outside diameter	**200 mm**
B	width	**38 mm**

SPECIFICATIONS

Manufacturer	**NACHI**
Manufacturer designation	**6222-2NS**
Rolling elements	**single-row ball bearing**
Seal	**open – no seals**
Radial internal clearance	**CN – normal**