Deep groove ball bearing 6222-2NSC3 NACHI

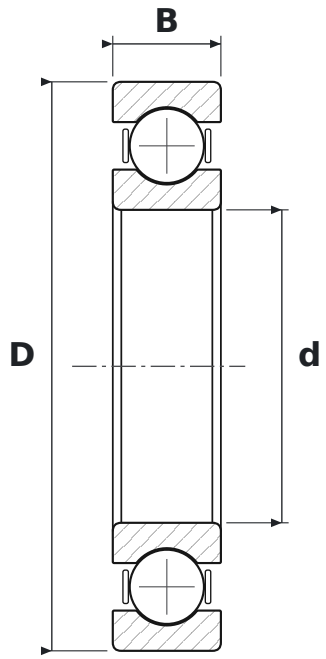

DIMENSIONS

d	bore diameter	**110 mm**
D	outside diameter	**200 mm**
B	width	**38 mm**

SPECIFICATIONS

Manufacturer	**NACHI**
Manufacturer designation	**6222-2NSC3**
Rolling elements	**single-row ball bearing**
C3	**radial clearance greater than normal**
Seal	**open – no seals**