Deep groove ball bearing 6222-2Z FAG

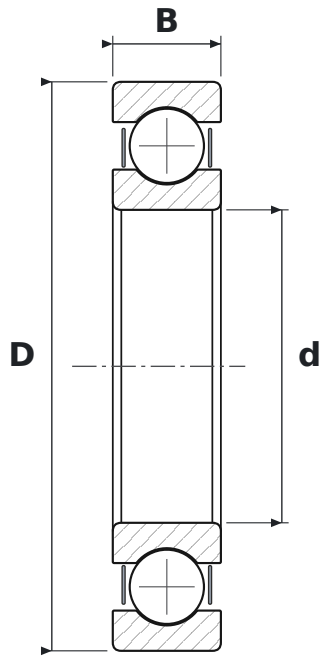

DIMENSIONS

d	bore diameter	**110 mm**
D	outside diameter	**200 mm**
B	width	**38 mm**

WHAT 6222-2Z MEANS

62	łożysko kulkowe zwykłe (6), seria średnic 2 – lekka
2Z	steel shields, both sides

SPECIFICATIONS

Manufacturer	**FAG**
Manufacturer designation	**6222-2Z**
Rolling elements	**single-row ball bearing**
Mass	**4.64 kg**