Deep groove ball bearing 6222 ZZ KOYO

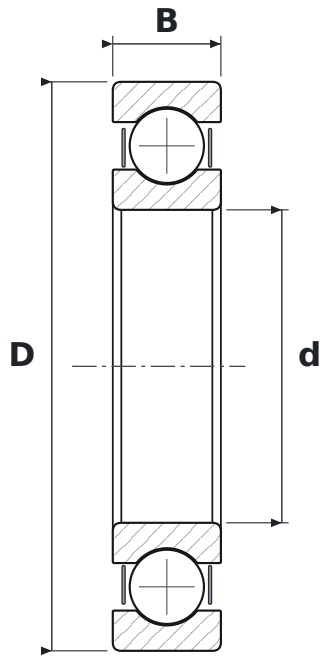

DIMENSIONS

d	bore diameter	**110 mm**
D	outside diameter	**200 mm**
B	width	**38 mm**

WHAT 6222 ZZ MEANS

62	łożysko kulkowe zwykłe (6), seria średnic 2 – lekka
ZZ	blaszki ochronne, dwustronne

SPECIFICATIONS

Manufacturer	**KOYO**
Manufacturer designation	**6222 ZZ**
Rolling elements	**single-row ball bearing**