Deep groove ball bearing 6224-2NS NACHI

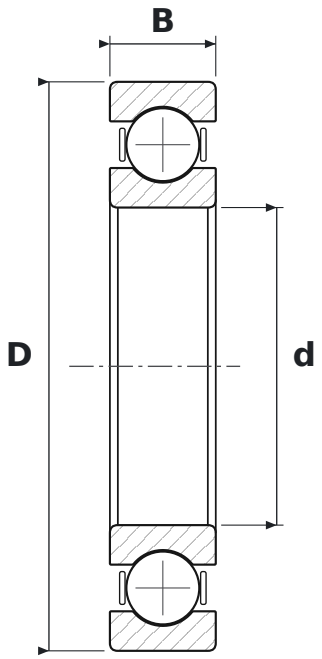

DIMENSIONS

d	bore diameter	**120 mm**
D	outside diameter	**215 mm**
B	width	**40 mm**

SPECIFICATIONS

Manufacturer	**NACHI**
Manufacturer designation	**6224-2NS**
Rolling elements	**single-row ball bearing**
Seal	**open – no seals**
Radial internal clearance	**CN – normal**