Deep groove ball bearing 6224 M/C3 SKF

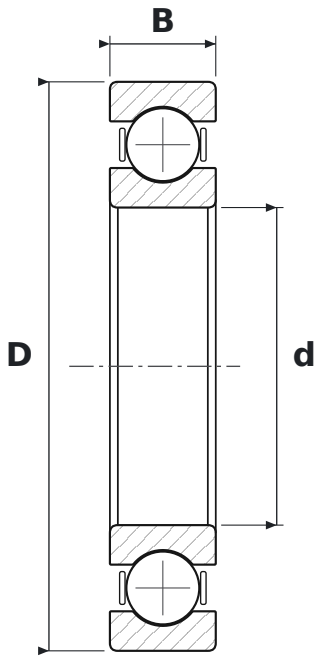

DIMENSIONS

d	bore diameter	**120 mm**
D	outside diameter	**215 mm**
B	width	**40 mm**

WHAT 6224 M/C3 MEANS

62	łożysko kulkowe zwykłe (6), seria średnic 2 – lekka
M	machined brass cage
C3	radial clearance greater than normal

SPECIFICATIONS

Manufacturer	**SKF**
Manufacturer designation	**6224 M/C3**
Rolling elements	**single-row ball bearing**