Deep groove ball bearing 6226 C3 ZEN

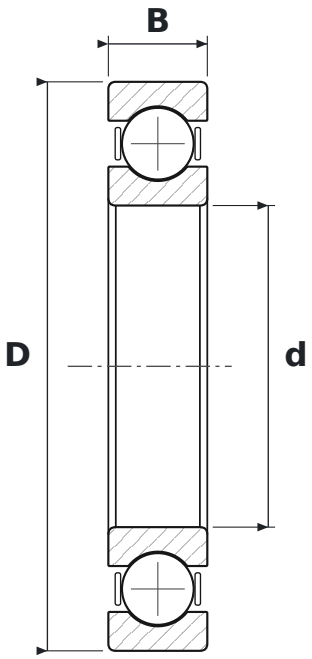

DIMENSIONS

d	bore diameter	**130 mm**
D	outside diameter	**230 mm**
B	width	**40 mm**

WHAT 6226 C3 MEANS

62	łożysko kulkowe zwykłe (6), seria średnic 2 – lekka
C3	radial clearance greater than normal

SPECIFICATIONS

Manufacturer	**ZEN**
Manufacturer designation	**6226 C3**
Rolling elements	**single-row ball bearing**
Mass	**5.83 kg**