Deep groove ball bearing 6226 NKE

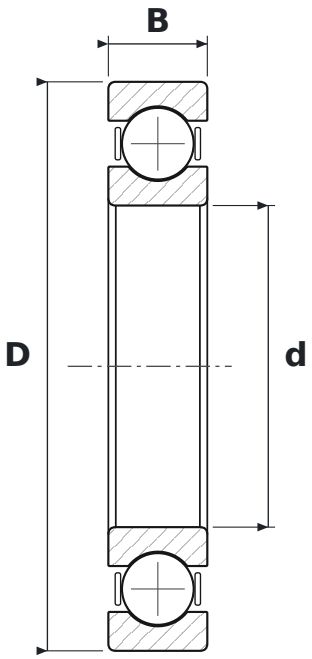

DIMENSIONS

d	bore diameter	**130 mm**
D	outside diameter	**230 mm**
B	width	**40 mm**

SPECIFICATIONS

Manufacturer	**NKE**
Manufacturer designation	**6226**
Rolling elements	**single-row ball bearing**
Seal	**open – no seals**
Radial internal clearance	**CN – normal**
Mass	**6.22 kg**