# Deep groove ball bearing 623-2RS1 SKF

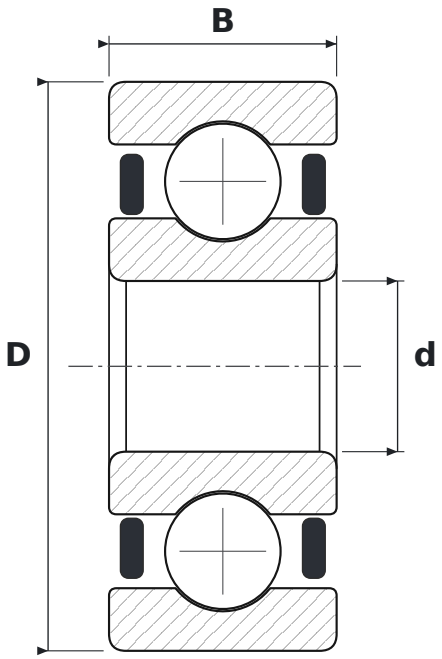


## DIMENSIONS

| | | |
|---|---|---|
| **d** | bore diameter | **3 mm** |
| **D** | outside diameter | **10 mm** |
| **B** | width | **4 mm** |

## SPECIFICATIONS

| | |
|---|---|
| Manufacturer | **SKF** |
| Manufacturer designation | **623-2RS1** |
| Rolling elements | **single-row ball bearing** |
| 2RS | **contact rubber seals, both sides** |
| Radial internal clearance | **CN – normal** |
| Mass | **0.002 kg** |