Deep groove ball bearing 623-2RSP KOYO

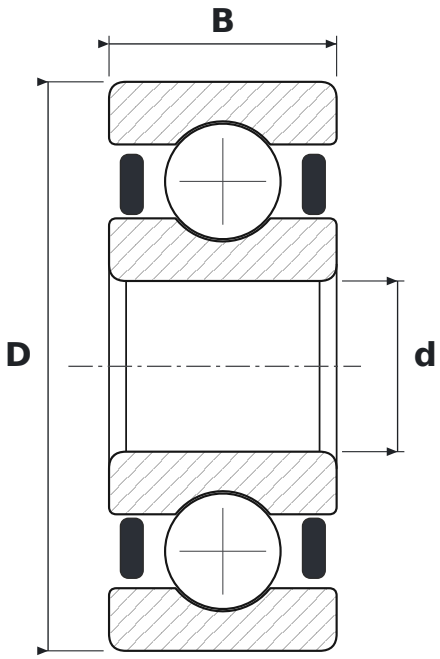

DIMENSIONS

d	bore diameter	**3 mm**
D	outside diameter	**10 mm**
B	width	**4 mm**

SPECIFICATIONS

Manufacturer	**KOYO**
Manufacturer designation	**623-2RSP**
Rolling elements	**single-row ball bearing**
2RS	**uszczelnienia stykowe, dwustronne**
Radial internal clearance	**CN – normal**