# Deep groove ball bearing 62306-2RS1C3 SKF

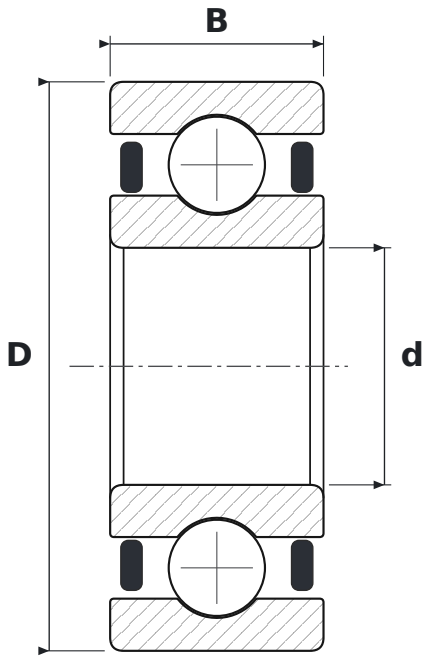


## DIMENSIONS

| | | |
|---|---|---|
| **d** | bore diameter | **30 mm** |
| **D** | outside diameter | **72 mm** |
| **B** | width | **27 mm** |

## WHAT 62306-2RS1C3 MEANS

| | |
|---|---|
| **2RS1** | uszczelnienia stykowe z kauczuku NBR wzmocnione blachą stalową, dwustronne |
| **C3** | radial clearance greater than normal |

## SPECIFICATIONS

| | |
|---|---|
| Manufacturer | **SKF** |
| Manufacturer designation | **62306-2RS1C3** |
| Rolling elements | **single-row ball bearing** |
| Mass | **0.492 kg** |