Deep groove ball bearing 62306-2RSR FAG

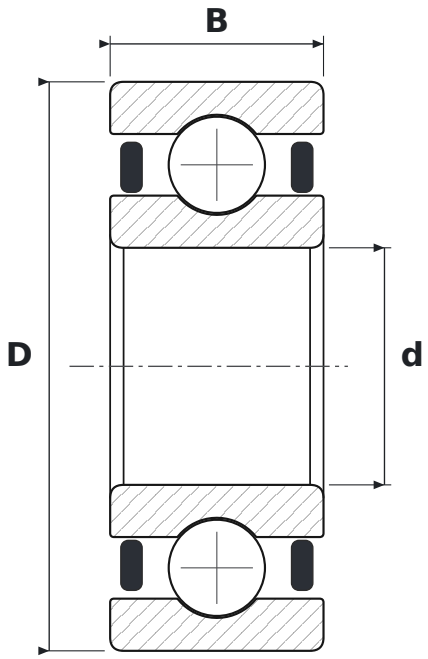

DIMENSIONS

d	bore diameter	**30 mm**
D	outside diameter	**72 mm**
B	width	**27 mm**

SPECIFICATIONS

Manufacturer	**FAG**
Manufacturer designation	**62306-2RSR**
Rolling elements	**single-row ball bearing**
2RS	**contact rubber seals, both sides**
Radial internal clearance	**CN – normal**
Mass	**0.47 kg**