# Deep groove ball bearing 62310-2RS1 SKF

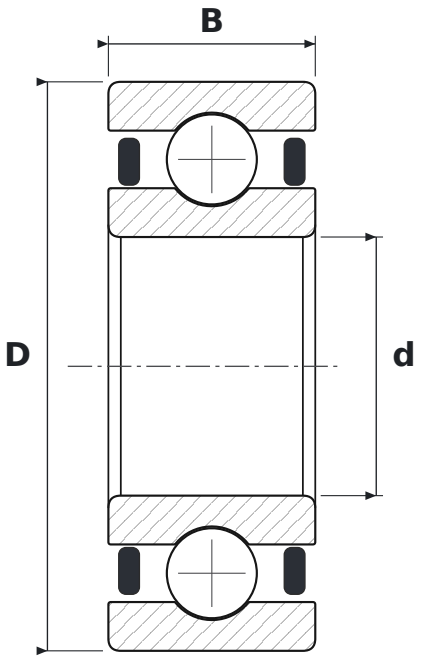


## DIMENSIONS

| | | |
|---|---|---|
| **d** | bore diameter | **50 mm** |
| **D** | outside diameter | **110 mm** |
| **B** | width | **40 mm** |

## SPECIFICATIONS

| | |
|---|---|
| Manufacturer | **SKF** |
| Manufacturer designation | **62310-2RS1** |
| Rolling elements | **single-row ball bearing** |
| 2RS | **contact rubber seals, both sides** |
| Radial internal clearance | **CN – normal** |
| Mass | **1.58 kg** |