Deep groove ball bearing 62310 ZEN

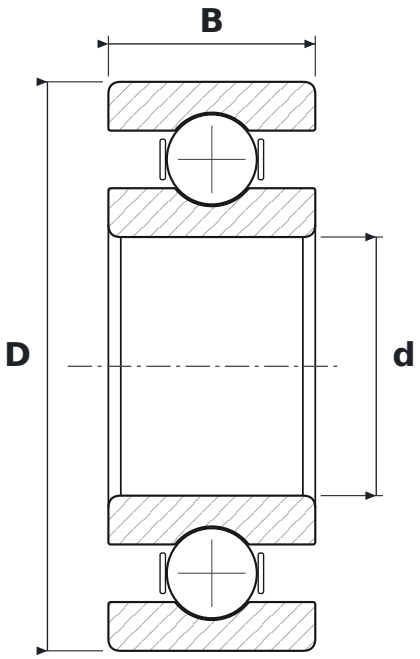

DIMENSIONS

d	bore diameter	**50 mm**
D	outside diameter	**110 mm**
B	width	**40 mm**

SPECIFICATIONS

Manufacturer	**ZEN**
Manufacturer designation	**62310**
Rolling elements	**single-row ball bearing**
Seal	**open – no seals**
Radial internal clearance	**CN – normal**
Mass	**1.483 kg**