Deep groove ball bearing 625-2Z/C3 SKF

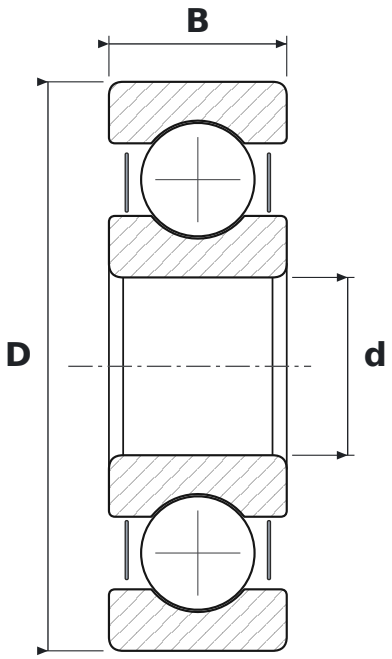

DIMENSIONS

d	bore diameter	**5 mm**
D	outside diameter	**16 mm**
B	width	**5 mm**

WHAT 625-2Z/C3 MEANS

2Z	steel shields, both sides
C3	radial clearance greater than normal

SPECIFICATIONS

Manufacturer	**SKF**
Manufacturer designation	**625-2Z/C3**
Rolling elements	**single-row ball bearing**