Deep groove ball bearing 626-2RSH SKF

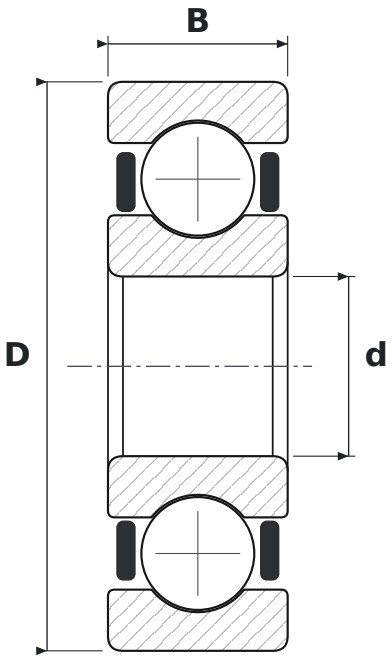

DIMENSIONS

d	bore diameter	**6 mm**
D	outside diameter	**19 mm**
B	width	**6 mm**

SPECIFICATIONS

Manufacturer	**SKF**
Manufacturer designation	**626-2RSH**
Rolling elements	**single-row ball bearing**
2RS	**contact rubber seals, both sides**
Radial internal clearance	**CN – normal**
Mass	**0.008 kg**