Deep groove ball bearing 626-2ZR-C3 FAG

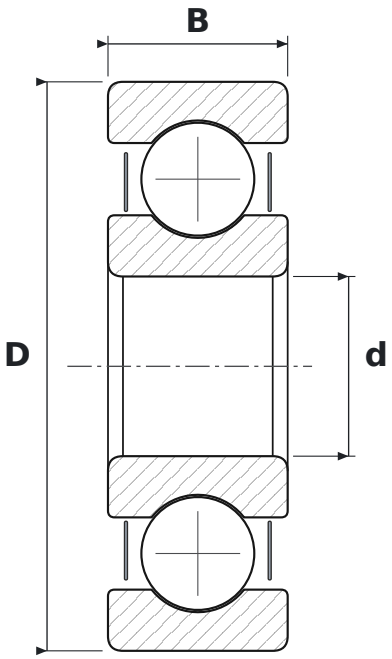

DIMENSIONS

d	bore diameter	**6 mm**
D	outside diameter	**19 mm**
B	width	**6 mm**

SPECIFICATIONS

Manufacturer	**FAG**
Manufacturer designation	**626-2ZR-C3**
Rolling elements	**single-row ball bearing**
2Z	**steel shields, both sides**
C3	**radial clearance greater than normal**
Mass	**0.008 kg**