Deep groove ball bearing 626 T1XDDMC3E NSK

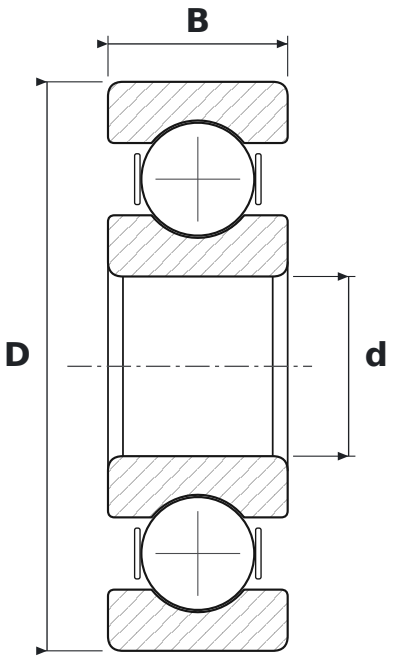

DIMENSIONS

d	bore diameter	**6 mm**
D	outside diameter	**19 mm**
B	width	**6 mm**

SPECIFICATIONS

Manufacturer	**NSK**
Manufacturer designation	**626 T1XDDMC3E**
Rolling elements	**single-row ball bearing**
M	**machined brass cage**
C3	**radial clearance greater than normal**
E	**reinforced design, higher load rating**
Seal	**open – no seals**
Mass	**0.008 kg**