Deep groove ball bearing 626-2Z SKF

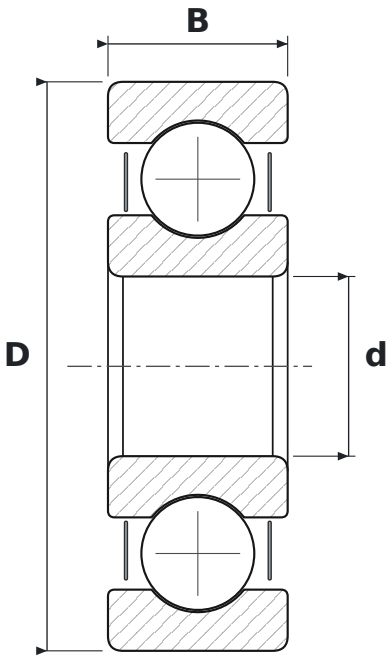

DIMENSIONS

d	bore diameter	**6 mm**
D	outside diameter	**19 mm**
B	width	**6 mm**

SPECIFICATIONS

Manufacturer	**SKF**
Manufacturer designation	**626-2Z**
Rolling elements	**single-row ball bearing**
2Z	**steel shields, both sides**
Radial internal clearance	**CN – normal**
Mass	**0.008 kg**