Deep groove ball bearing 626 ZZ SNR

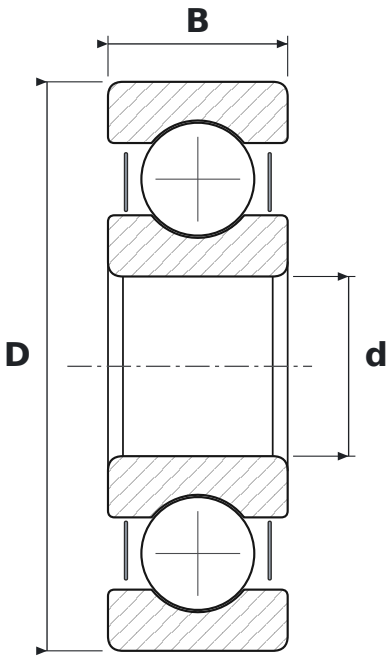

DIMENSIONS

d	bore diameter	**6 mm**
D	outside diameter	**19 mm**
B	width	**6 mm**

SPECIFICATIONS

Manufacturer	**SNR**
Manufacturer designation	**626 ZZ**
Rolling elements	**single-row ball bearing**
2Z	**steel shields, both sides**
Radial internal clearance	**CN – normal**