Deep groove ball bearing 626-2Z/C3 SKF

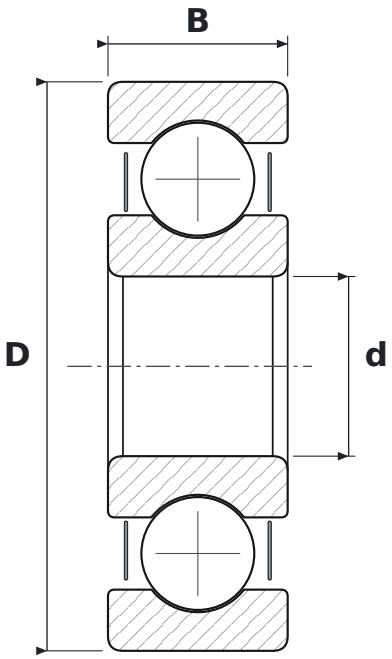

DIMENSIONS

d	bore diameter	**6 mm**
D	outside diameter	**19 mm**
B	width	**6 mm**

WHAT 626-2Z/C3 MEANS

2Z	steel shields, both sides
C3	radial clearance greater than normal

SPECIFICATIONS

Manufacturer	**SKF**
Manufacturer designation	**626-2Z/C3**
Rolling elements	**single-row ball bearing**
Mass	**0.008 kg**